Technical Specifications

Datataker SI-V & SI-C

INPUT ISOLATION for DATATAKER

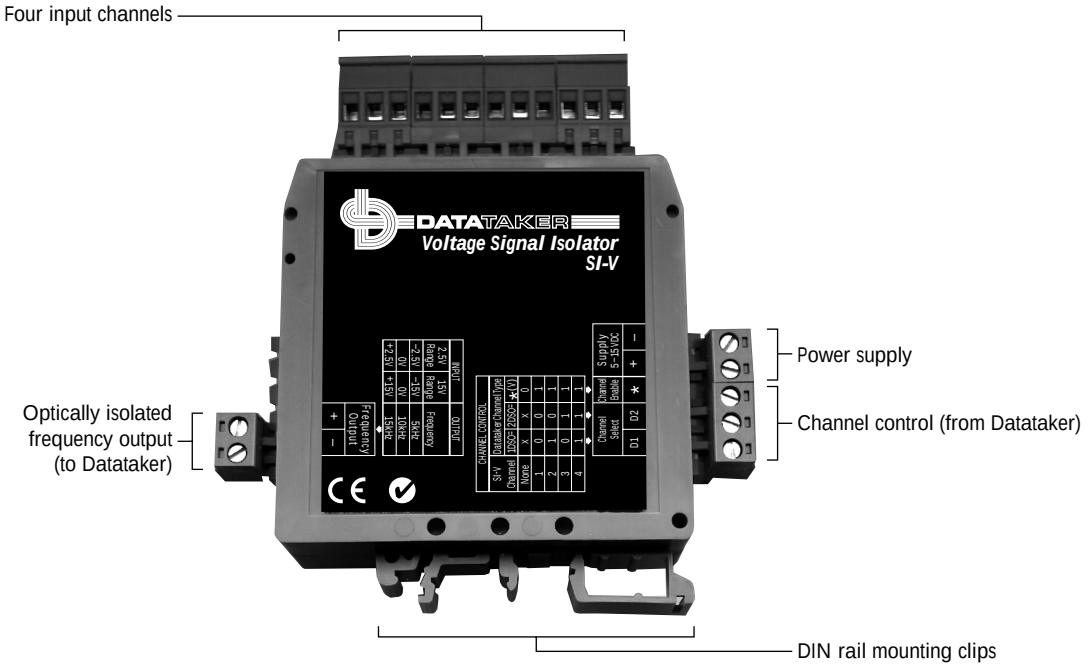

Data Electronics' signal isolators are used with Datataker data loggers in applications where the sensors must be electrically isolated from the logger.

The isolators are used where the direct connection of sensors to the Datataker may result in the Datataker's common mode input voltage (CMV) being exceeded, which can result in inaccurate measurements and, in extreme cases, damage to the Datataker.

Two models are available; the Voltage Signal Isolator (SI-V) and the Current Signal Isolator (SI-C):

Model SI-V

The SI-V provides a solution in the following situations:

- Where the direct connection to the Datataker of sensors with a voltage signal may result in the input voltage exceeding the logger's CMV. This can occur, for example, when monitoring the voltage of individual cells within a large battery: connecting several of the cells directly to logger inputs may result in the Datataker's CMV being exceeded (the logger's internal common ground causes the total voltage of the connected cells to be applied to the logger).
- Where a sensor-to-Datataker ground loop results in a sensor voltage that exceeds the logger's CMV. This can occur when the Datataker ground and any sensor ground are at different potentials and a current path exists between them.

Model SI-C

The SI-C provides a solution in the following situations:

- In a 4-20mA current loop where the offset in the loop exceeds the logger's CMV. This can occur when more than one current sensor/device is in the current loop, causing the total voltage across the devices to exceed the CMV.
- Where multiple or noisy ground loops generate a voltage across a current sensor that exceeds the logger's CMV. This can occur in large or excessively noisy environments.

Operation

The SI-V or SI-C is connected between the Datataker and its sensors (see figures overleaf). Its internal opto-isolator provides 500V electrical isolation between input and output, thereby eliminating the CMV and ground loop situations previously described.

The isolators convert the sensor voltage (SI-V) or sensor current (SI-C) to a proportional digital frequency output in the 5 to 15kHz range. This output is suitable for direct connection to any analog channel of the Datataker, which is programmed to convert the frequency values to engineering units (using the span and polynomial functions) and to log the data.

Each isolator has four input channels that can be individually multiplexed (switched) to its output, then passed to a Datataker analog channel. The isolators therefore provide 4-into-1 channel expansion for the Datataker. Multiplexing is controlled by the Datataker via the isolator Channel Select and Channel Enable terminals (see figures overleaf). Sample Datataker programs that control the multiplexer are included with each isolator and explained in the manual. These programs can be easily modified to suit the user's applications.

Up to two isolators can be connected to a Datataker analog channel (using single-ended connections to the Datataker's +, – and R terminals; see Figure 1).

Screw terminal blocks are provided with each isolator. The blocks can be unplugged from the body of the unit for easy access and quick connection or disconnection of the wires.

The isolators require 5–15VDC power. The Datataker's 6V battery is a suitable power source.

LLOYD'S REGISTER QUALITY COMPANY ISO9002
NATIONAL ACCREDITATION OF CERTIFICATION BODIES
DATA ELECTRONICS (Aust.) Pty. Ltd.
Certified to ISO9002
TOTAL QUALITY COMMITMENT

Datataker Resources Required

The following Datataker resources are required when using signal isolators with the Datataker:

Analog channel	one per isolator (to read isolator Frequency Output)
Excite output	one per isolator, or one per isolator pair if connected as in Figure 1 (to control isolator Channel Enable)
Digital channel	two only, shared by all isolators (to control isolator Channel Select)

In addition, if "zero offset" compensation is used (gives best measurement accuracy; described in the user's manual), the following Datataker resources are also required:

Channel variable	one only, shared by all isolators (to store the zero offset measurement)
Channel variable	two per isolator channel read by the Datataker

Ordering

Datataker Voltage Signal Isolator SI-V	SI-V
Datataker Current Signal Isolator SI-C	SI-C

More Information

For further information, please contact Data Electronics or our representatives. Our application engineers are happy to talk over your requirements at any time.

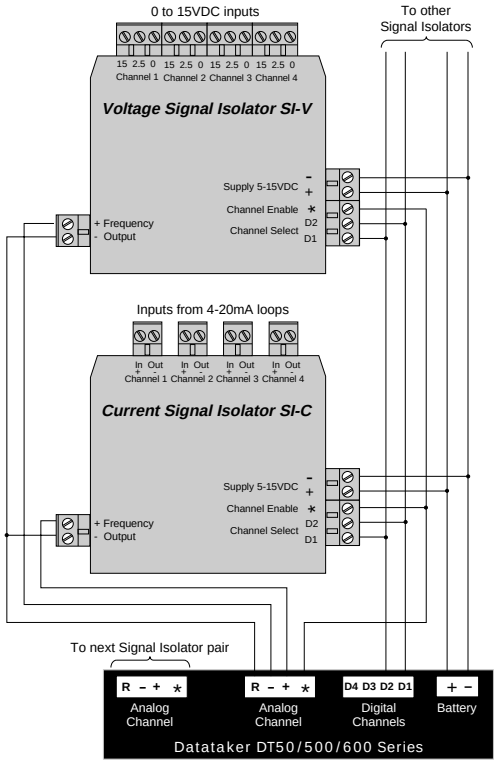

Fig. 1: Typical Single-Ended Connection
One or two signal isolators per Datataker channel

Specifications

Conversion ranges

Model SI-V INPUT 2.5V Range	Model SI-V INPUT 15V Range	Model SI-V OUTPUT Frequency	Model SI-C INPUT 4–20mA Range	Model SI-C OUTPUT Frequency
–2.5V	–15V	5kHz	4mA	10.8kHz
0V	0V	10kHz	12mA	12.4kHz
+2.5V	+15V	15kHz	20mA	14.0kHz

Maximum input voltage (SI-V)	25V
Maximum input current (SI-C)	50mA
Inter-channel isolation	250VDC or 175VAC maximum common mode between channels
System isolation	500VDC or 350VAC maximum series mode between inputs and output, or inputs and power supply
Accuracy*	
±2.5V range	Better than 0.025% of reading plus offset of less than 0.25mV (input impedance 150K, 0.1% 15ppm/°C)
±15V range	Better than 0.2% of reading (input impedance 900K, attenuator is 750K and 150K, 0.1% 10ppm/°C)
4-20mA range	Better than 0.1% of reading (current shunt 100R, 0.1% 10ppm/°C)
Temperature coefficient	Better than ±75ppm/°C from –20 to +60°C
Output	Output frequency is related to voltage input by the relationship $F_{out}(kHz) = 10 + 2V_{in}$
Power supply	5–15VDC
Current drain	30mA standby, 70mA at measurement
Case material	KRILEN-F polyamide 6 (fibreglass-reinforced) thermoplastic, IP40
Mounting	DIN rail clips incorporated in case
Terminals	Screw-type, mounted in plug-in terminal blocks
Dimensions	Body only: 80mm x 74mm x 25m Inc. terminals and mounting clips: 106mm x 107mm x 25mm
Operating temperature	–10 to 50°C
Weight	140g

* *Readings taken at 20°C using zero-offset channel compensation, Datataker on frequency range*

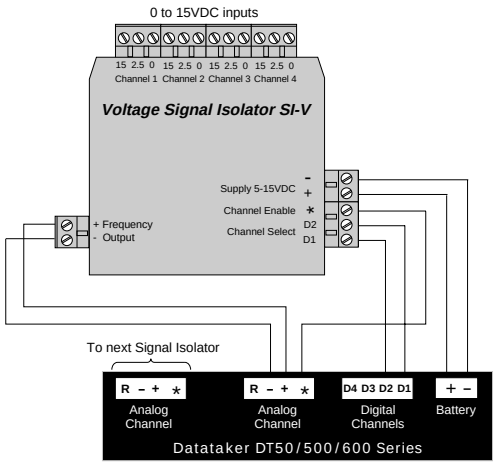

Fig. 2: Typical Differential Connection
One Signal Isolator per Datataker channel

Due to continual product improvement, Data Electronics reserves the right to alter the specifications of this product without notice.
All brand and product names are trademarks or registered trademarks of their respective holders.

http://www.datataker.com

Data Electronics U.S.A., Inc.
22961 Triton Way, Suite E
Laguna Hills CA 92653 U.S.A.
1-800-9-LOGGER
Phone 949 452 0750 (Int'l +1 949 452 0750)
Fax 949 452 1170 (Int'l +1 949 452 1170)
E-mail deusa@datataker.com

Data Electronics (Aust.) Pty. Ltd.
Certified to ISO9002
7 Seismic Court, Rowville
Victoria 3178 Australia
Phone 03 9764 8600 (Int'l +61 3 9764 8600)
Fax 03 9764 8997 (Int'l +61 3 9764 8997)
E-mail datataker@dataelec.com.au
ACN 006 134 863

Data Electronics (U.K.) Ltd.
26 Business Centre West – Avenue One
Letchworth Garden City
Herts. SG6 2HB United Kingdom
Phone 01462 481291 (Int'l +44 1462 481291)
Fax 01462 481375 (Int'l +44 1462 481375)
E-mail datataker@dataelec.co.uk