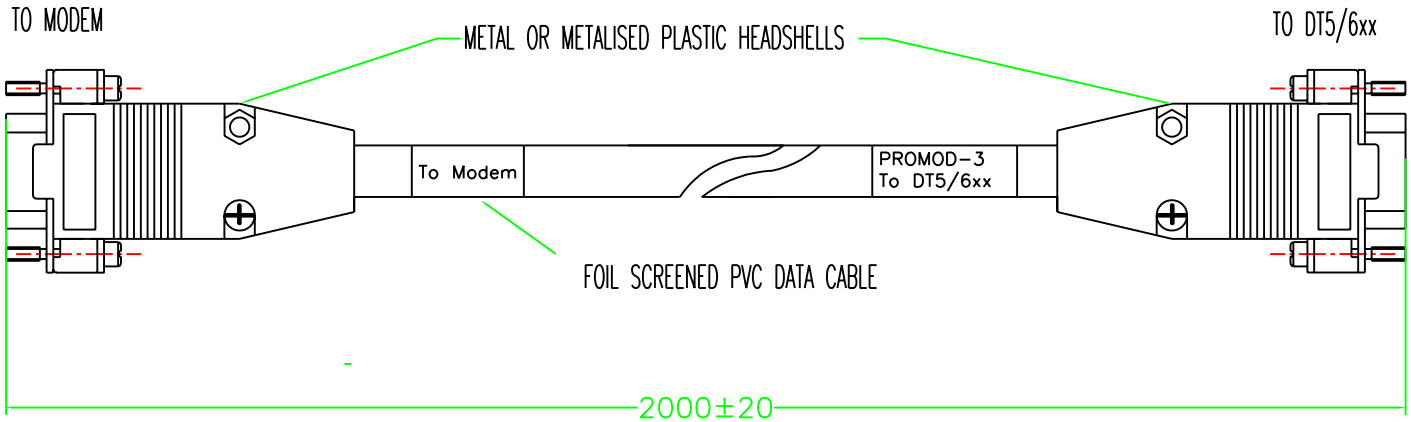

WIRING DIAGRAM

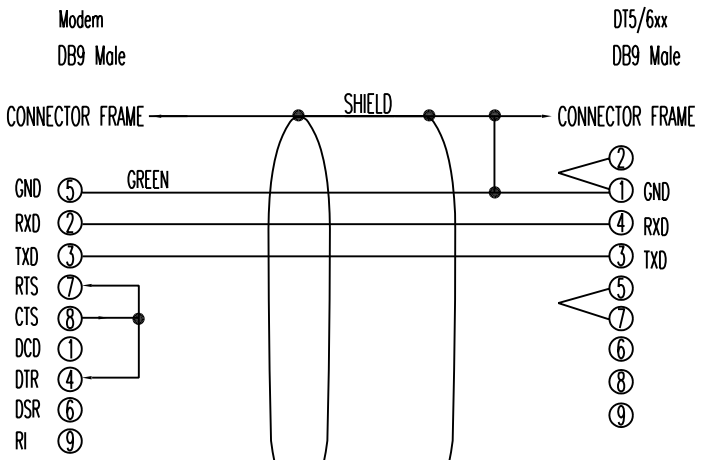

The linking of pins 4, 7 & 8 tricks the Modem serial port into thiking that the DT5/6xx is ready to communicate

Pins 2,5 & 7 makes the cable compatible with DT5/6xx Series 1. No effect on newer versions. There is no handshaking provided by the DT5/6xx serial port

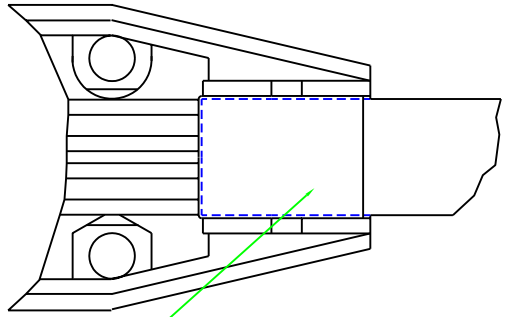

DETAIL "A"

FOIL SCREEN FOLDED 360° AROUND CABLE, AND IN FULL CONTACT WITH HEADSHELL, FORMING AN E.M.I TIGHT ELECTRICAL "SEAL"

NOTES

* GREEN CABLE MUST GO DIRECTLY TO PIN 1 AT DATATAKER END, THEN LINK TO PIN 2.
* EACH CONDUCTOR IS 7/0.02, PVC COVERED.
* SCREEN MUST BE IN ELECTRICAL CONTACT WITH HEADSHELL AT BOTH ENDS (SEE DETAIL "A").
* IF DRAIN WIRE PROVIDED, DO NOT USE.

Ver.	Ammendments	Appd.	Date.
C0	ECO-2209	DZ	20/10/03
B2	ECO586	RJS	21/03/97
B1	CN309	RJS	16/10/96
B0	CN244	RJS	16/10/95
A1	ORIGINAL ISSUE	AJE	26/10/94

ALL DIMENSIONS ARE IN MILLIMETERS UNLESS STATED OTHERWISE

Tolerances Linear - Whole Numbers: ± 0.5 Angular : ± 1deg.
(Unless Specified Otherwise) 0.0: ± 0.2 Holes : ± 0.2
0.00: ± 0.05

Material: AS SHOWN
Finish: NOT APPLICABLE
File Name: DD-0101-C0.DWG
Scale: NOT TO SCALE
Sheet 1 of 1 Size A4

Third Angle Projection

Drawn: DZ Date: 30/10/03
Checked: Date:
Approved: Date:

Part No. PROMOD-3

Title: DT5/6xx to Modem Cable

DataTaker Pty. Ltd.
7 Seismic Court Rowville
VIC 3178 AUSTRALIA
Ph (613) 9764 8600 Fax (613) 9764 8997

Dwg. No. DD - 0101 - C0